



Welcome to

Ease Cool Electric Machines

About Us:

Ease Cool Machines, Bengaluru based company providing solutions for air blower and exhaust system. We are manufacturing and supplyers of External Rotor Motors, Axial Fans, Centrifugal Fans, Blowers with Single and Double Inlet and of various combinations of impeller profiles like forward and backward curved, custom made air moving equipment's to customer requirements.

Product Range:

Centrifugal Blowers

Axial Flow Fans

Heavy Duty Blowers

Centrifugal Blowers

A centrifugal Blowers/Fans is a mechanical device for moving air or other gases. The terms "blower" and "squirrel cage fan" used as common names. These fans increase the speed and volume of an air stream with the rotating impellers fitted to eternal rotor motors.

Centrifugal Blowers use the kinetic energy of the impellers to increase the volume of the air stream, which in turn moves them against the resistance caused by ducts, dampers and other components. Centrifugal Blowers displace air radially, changing the direction typically by 90° of the airflow. They are sturdy, quiet, reliable, and capable of operating over a wide range of conditions.

Centrifugal Blowers are constant displacement devices or constant volume devices, meaning that, at a constant fan speed, a centrifugal fan moves a relatively constant volume of air rather than a constant mass. This means that the air velocity in a system is fixed even though the mass flow rate through the blower is not.

Majorly products are used in Plastic Extruder Machines, Force Cooling, Dynamic Box, Clean Room Systems, HVAC. Industrial Process and Air Pollution Control Units and etc.

Product Design and Specifications: "Centrifugal Single Inlet External Rotor Blowers"

Product Dimensions (in mm):

Product Code	A	B	C	D	E	F	G	H	I	J	K
SIB-120-30-RANGE	117	88	99	67	57	57	90	56	177	191	96
SIB-120-60-RANGE	114	85	98	68	80	60	128	81	176	187	96
SIB-133-60-RANGE	120	111	100	85	85	73	134	86	178	210	96
SIB-150-60-RANGE	109	140	90	120	120	90	128	75	225	275	140
SIB-160-60-RANGE	135	122	115	105	105	92	160	98	222	265	140
SIB-180-75-RANGE	183	188	163	168	68	134	157	135	296	360	149

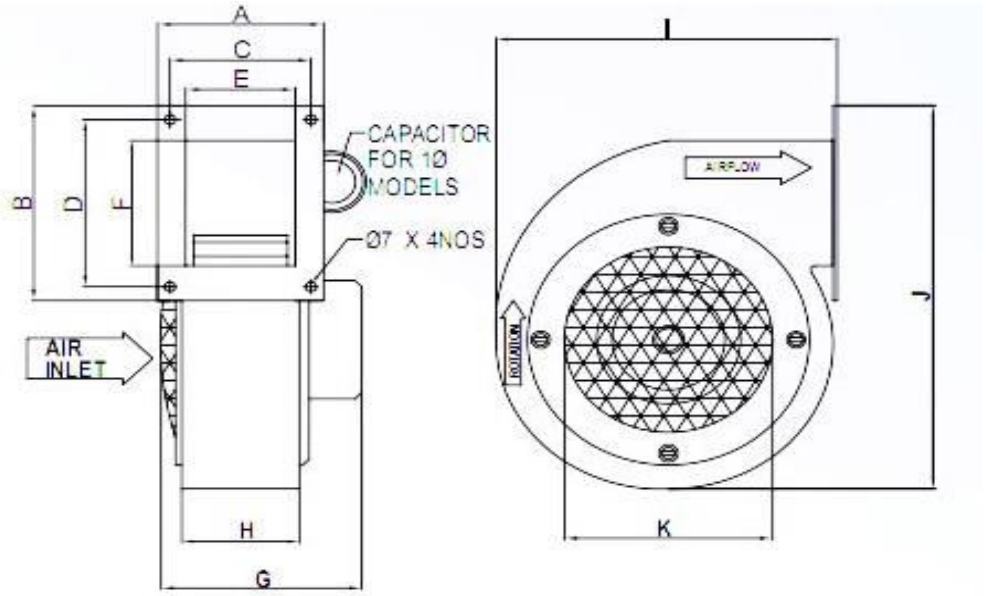

Hi-Speed Single / Three Phase Blowers Specification:

Product Code	Power Supply					Output			Cap.	Amb.	Wt. In
		Ph	Amps	Watts		CFM	CMH				
SIB-120-30-15SP	230	1	0.17	50	2600	82	140	72	1.5	60	2
SIB-120-60-15SP	230	1	0.2	65	2700	162	275	70	2	60	2.5
SIB-120-60-15TP	415	3	0.2	60	2700	162	275	70	NA	60	2.5
SIB-133-60-25SP	230	1	0.23	105	2600	241	410	65	2	60	3
SIB-133-60-25TP	415	3	0.25	110	2700	240	400	65	NA	60	3
SIB-150-60-35SP	230	1	0.45	145	2650	276	470	60	4	60	4.5
SIB-150-60-35TP	415	3	0.3	130	2650	276	470	60	NA	60	4.5
SIB-160-60-45SP	230	1	0.75	230	2500	371	630	70	6	50	5.5
SIB-160-60-45TP	415	3	0.25	190	2500	354	600	70	NA	50	5.5
SIB-180-75-45SP	230	1	1.8	270	2450	440	750	75	6	40	6
SIB-180-75-45TP	415	3	0.35	240	2450	440	750	75	NA	40	6

All Blowers and Fans are available in Low Speed, Single and Three Phase compatibles on customer demand.



Axial Flow Fans:

An axial fan is a type of fan that causes gas to flow through it in an axial direction, parallel to the shaft about
which the blades rotate. The flow is axial at entry and exit. The fan is designed to produce a pressure difference, and hence force, to cause a flow through the fan. Factors which determine the performance of the fan include the number and shape of the blades. Fans have many applications including in wind tunnels and cooling towers. Design parameters include power, flow rate, pressure rise and efficiency.

Axial Fans are majorly used in Chillers, Ventilations, Heat Exchangers, Welding Machines and etc.

Product Dimensions (in mm):

Product Code	Fan Dia	Height	Mounting without		Mounting with Casing		Mounting with	
				PCD	Hole Tread	PCD	Hole	PCD
AFF-200-15S/B	197	70	M4	58	M7	245	M7	245
AFF-250-25S/B	248	80	M4	58	M7	295	M7	295
AFF-300-35S/B	298	90	M4	58	M7	345	M7	345

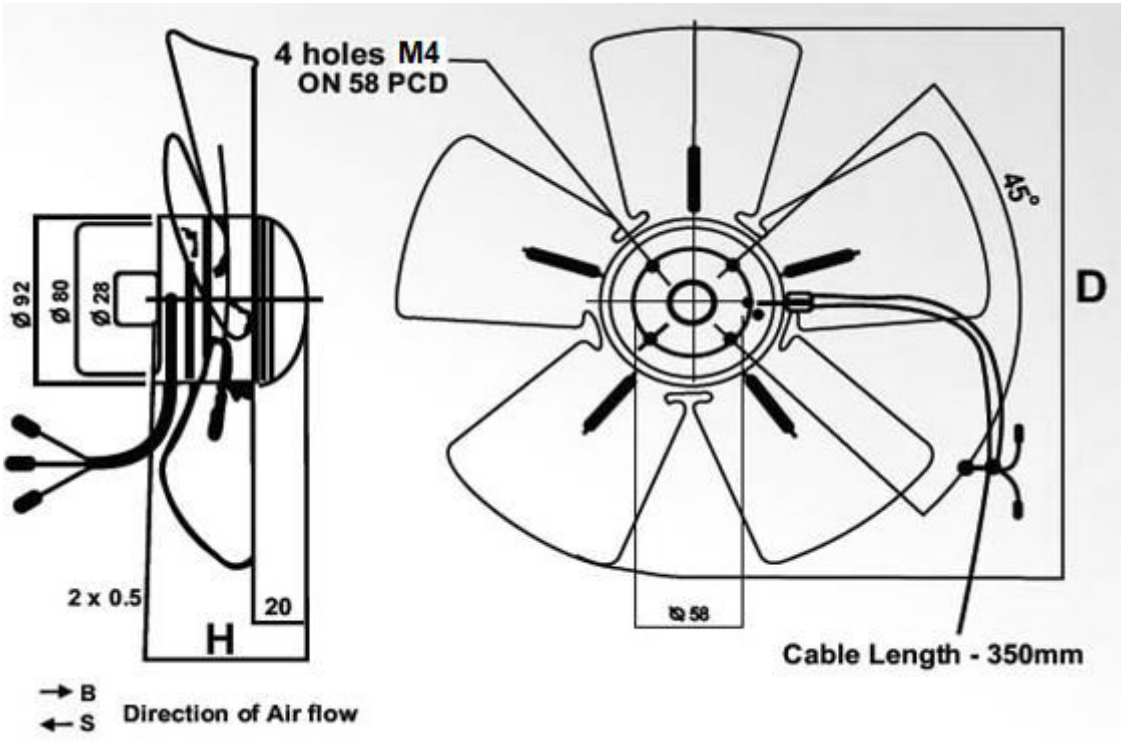

Hi/Low Speed Single / Three Phase Axial Flow Fan Specification:

Product Code	Power Supply					Output			Cap.	Amb.	Wt. In
		Ph	Amps	Watts		CFM	CMH				
AFF-200-15S/B-P2	230	1	0.3	60	2750	529	900	65	2	60	1
AFF-200-25S/B-T2	415	3	0.2	90	2800	529	900	65	NA	60	1
AFF-200-25S/B-P4	230	1	0.2	55	1400	250	425	50	2	60	1
AFF-200-25S/B-T4	415	3	0.35	50	1400	250	425	50	NA	60	1
AFF-250-25S/B-P2	230	1	0.6	140	2600	1000	1700	65	2	60	2
AFF-250-25S/B-T2	415	3	0.25	100	2600	1000	1700	65	NA	60	2
AFF-250-25S/B-P4	230	1	0.25	65	1400	500	850	50	2	60	2
AFF-250-25S/B-T4	415	3	0.25	80	1475	588	1000	50	NA	60	2
AFF-300-35S/B-P4	230	1	0.3	85	1400	1209	1750	65	2	60	3
AFF-300-35S/B-T4	415	3	0.35	140	1400	1209	1750	65	NA	60	3

Above all Fans are available as Blower and Suction type.

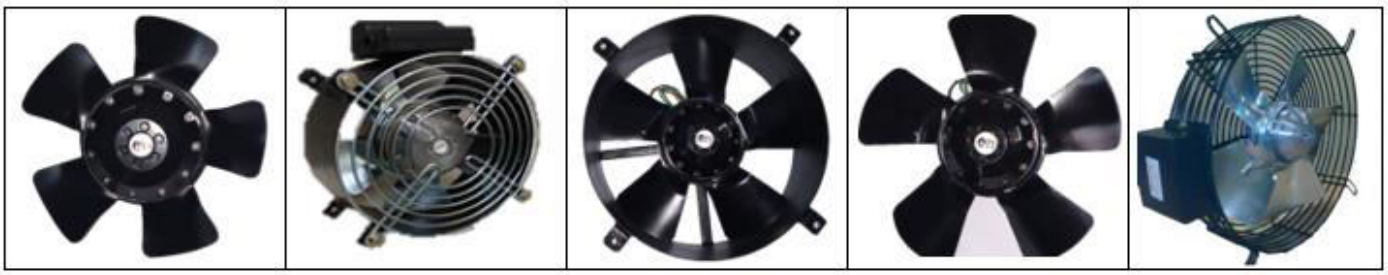

For More details and product enquires contact us;

Ease Cool Electric Machines
No. 165, 1st Floor, 11th Cross,
MEC Layout, Ganapathynagar,
Peenya 3rd Phase, Bengaluru 560058
GSTN: 29GPWPS8195P1ZZ

Mob: +91 90 1982 8278
+91 91 4120 1915
e-mail: easecool04@gmail.com
Web: www.sg-groups.com